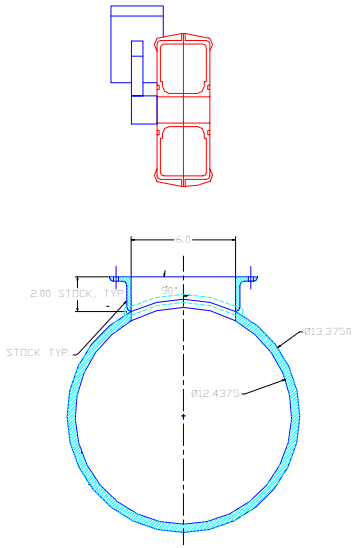

FRONT VIEW OF PIPE

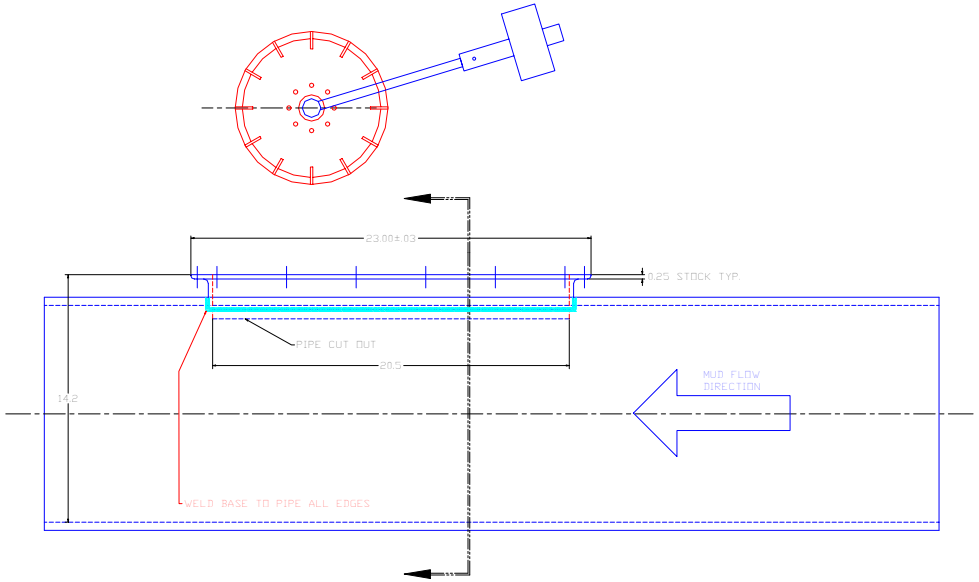

SIDE VIEW OF PIPE